ENKEL
MAKİNA

RISING THE STANDARTS



















ENKEL LIFTS

Our company is engaged in manufacturing and maintenance of suspended platforms. To make our products more technological and the best in the market we are specialized only on suspended platforms system.

Electrical suspended gondola is used for exterior wall construction, decoration, cleaning and maintenance of high-rising buildings.

We make research and use height technology in our electrical boxes also our machines are user friendly.

High quality of our products are guaranteed by reliable quality control and testing at all production phases. Our We have passed the certification by TS EN 1808. Thanks to the low prices and the high quality of our products,

We are among the most appreciated and the best selling companies. The product is currently used successfully in Latin America, Russia, Europe, Azerbaijan and Georgia.

ENKEL
MAKİNA

CHOOSE ENKEL

Est. 2015, Enkel is an international provider and manufacturer of electric swing stage, scaffolding, mast climbers and lifts.



SWING STAGE ADVANTAGES

Our electrical suspended platforms provides reliable operation by our company according to TS EN 1808 standard. We use safety ropes biseds of climbing rope, for unusual uncontrol situation, the safety lock is activated. The ropes we use are 8.3 mm in diameter and galvanized. Our motors equipped with the latest overloading technology prevents platfroms from being overloaded with effective load sensors inside of the motor. All our production galvanized, so our products are long life and stainless. All parts used in our machines are CE certified and are checked by our engineers before our customers start to use.

1. Price - the cost of purchasing and operating of suspended platforms are significantly lower than scaffolding or ther systems.
2. Fast assembly - the assembly system is designed in such a way that you can quickly assemble the cradle, because time is the most expensive in construction area.
3. Simplicity - there is no need to drill the facade or roof to assemble the suspended platforms.
4. Lifting feature - with the help of double 1.5 kw motors and user interface equipment, you can easily not only work at height, but also quickly lift the load.
5. Safety - With the use of sensors, devices and production according to the technology with international standards, our platforms are very safe
6. Storage -After the completed work, you can easily disassemble the platform, so it will take up little space in your warehouse.

After the completed work, you can easily disassemble the platform, so it will take up little space in your warehouse.



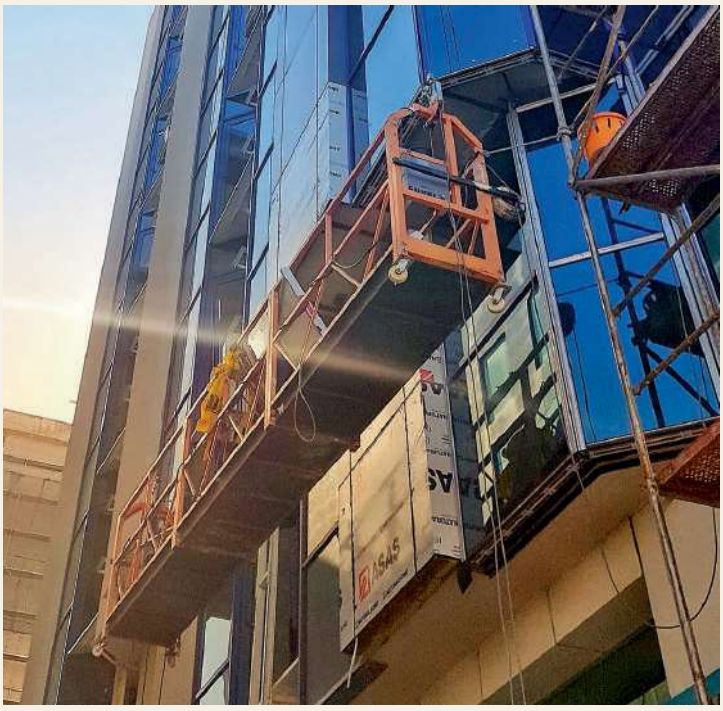



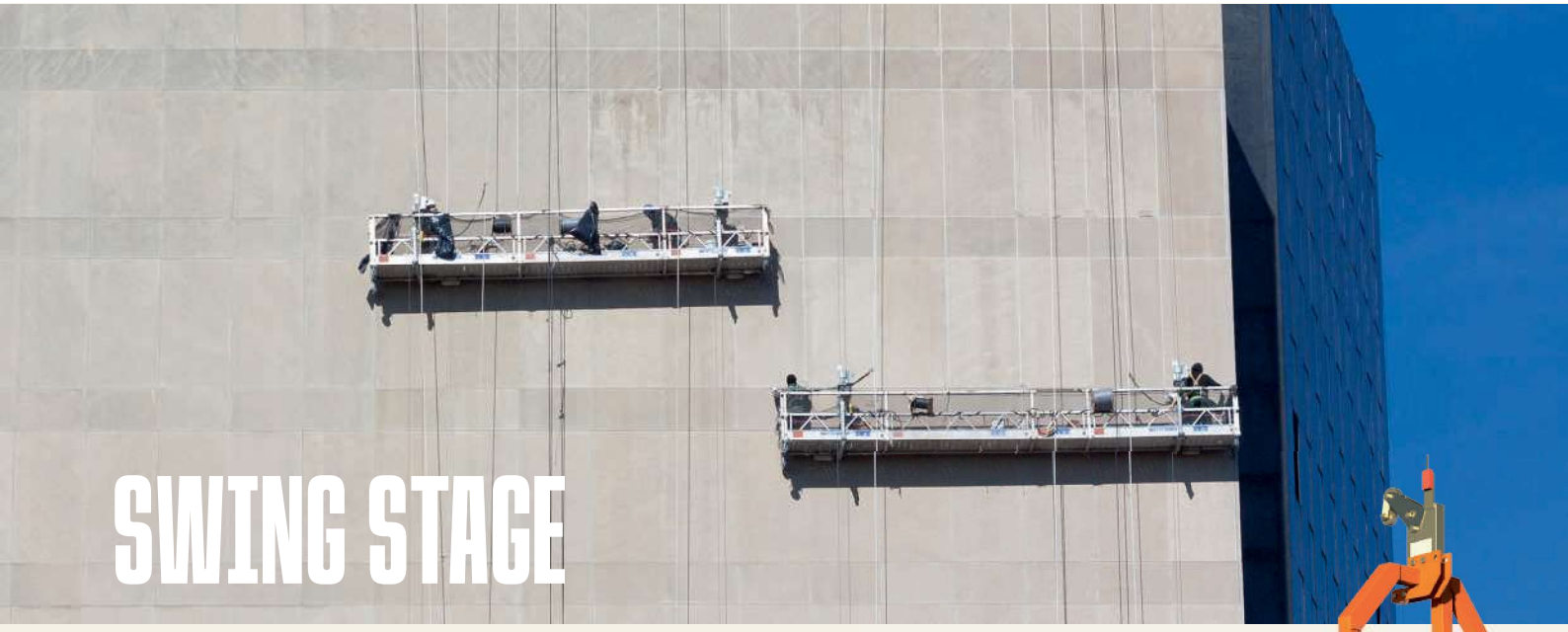

SWING STAGE

The temporarily installed suspended access equipment is multipurpose and highly efficient construction machinery applicable to work at heights. It is a substitute of traditional scaffold used for exterior wall construction, decoration, cleaning and maintenance of high-rising buildings, such as mortaring, decorating walls with mosaic, painting, fixing windows and cleaning etc. It is also ideal for applications such as installation of elevators, the welding of seagoing ship in ship building industry, cleaning of oil-based paint, big size tanks, high chimneys, bridges and large dams.









Your advantage using suspended platforms ENKEL

- Because of universal modular system of the platform, you can easily work on geometrically complex facades. The basket of platform consists of 3 modules, 3 meters, 2 meters, 1 meter, this will allow you to mount it 1 meter, 2 meters, 3 meters, 4 meters, 5 meters, 6 meters long.
- Safety is important; therefore, we reinforced the frame of the platform basket, the profile that we use in the production of 60 mm. x 40 mm. The surface of platforms used 3 mm. sheet steel, and profile 50 mm x 50 mm x 3 mm for the production of engine frames.
- To protect against corrosion, all metal components are hot galvanized after welding.
- Two powerful 3-phase 1.5 kW electric motors with a gearbox, winch and an electromagnetic brake, reliably placed in one single aluminum case, are responsible for lifting. lifting speed is 9.5 meters per minute
- Two certified mechanical safety locks work well in an unexpected situation.
- The electric lift control panel is equipped with a dynamic current measurement system, this system will warn the operator of low or absent voltage at one of the phases, preventing the electric motor from burning, components from the professional series of manufacturers are used in the control panel assembly.
- The platform basket in basic equipment is equipped with reinforced polyamide wheels.
- The electronic overload protection EOS Ts (Electronic Overload System) lift protects the user of the lift from the human factor and guarantees a long service life. Our platforms use new generation of control box which are more user friendly and have soft start.
- Maximum loading weight is 630 kg.
- Four items of metal galvanized lifting cables with a thickness of 8.3 mm. 4 x 25Fi + PP used.
- All Standards permits are available, as well as a passport, certificates of conformity and operating instructions.
- Our platforms are popular in the countries of the European Union, South America, North Africa, Azerbaijan, Turkmenistan and Georgia

There are two kind of temporary suspension mechanism parapet clamps and counter weight console.



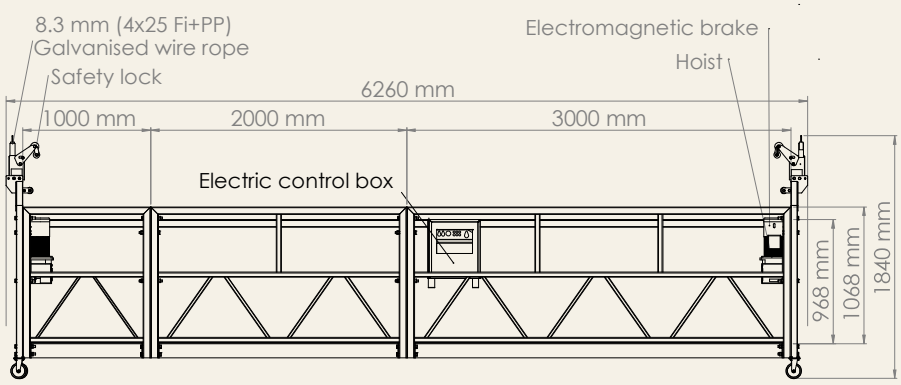

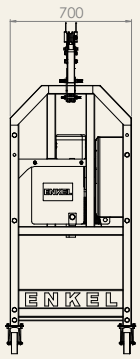

DOUBLE PLATFORM

Our double suspended platforms are designed to speed up your job, allowing you to work in the wider area, you can finish your job faster and more practical way.







Sometimes the curtain wall manufacturers use suspended platform to fix the curtain wall , such as screwing bolt, smearing waterproofing sealant. If the glass is big, then using double suspended platform also is a good choice.

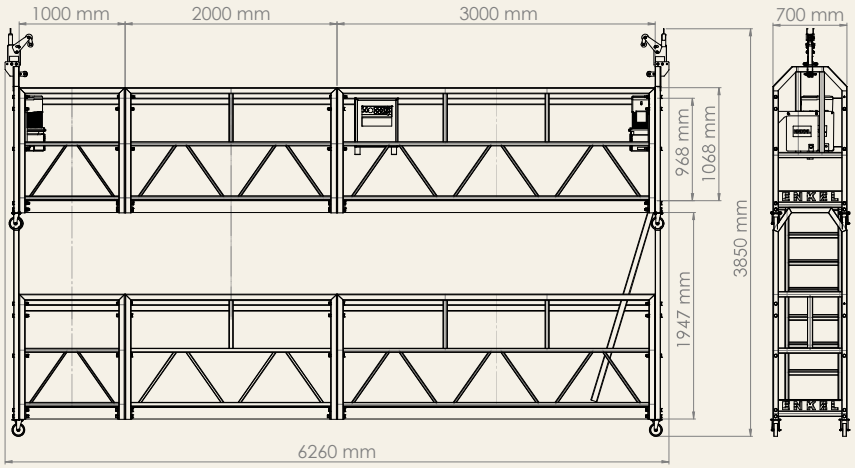

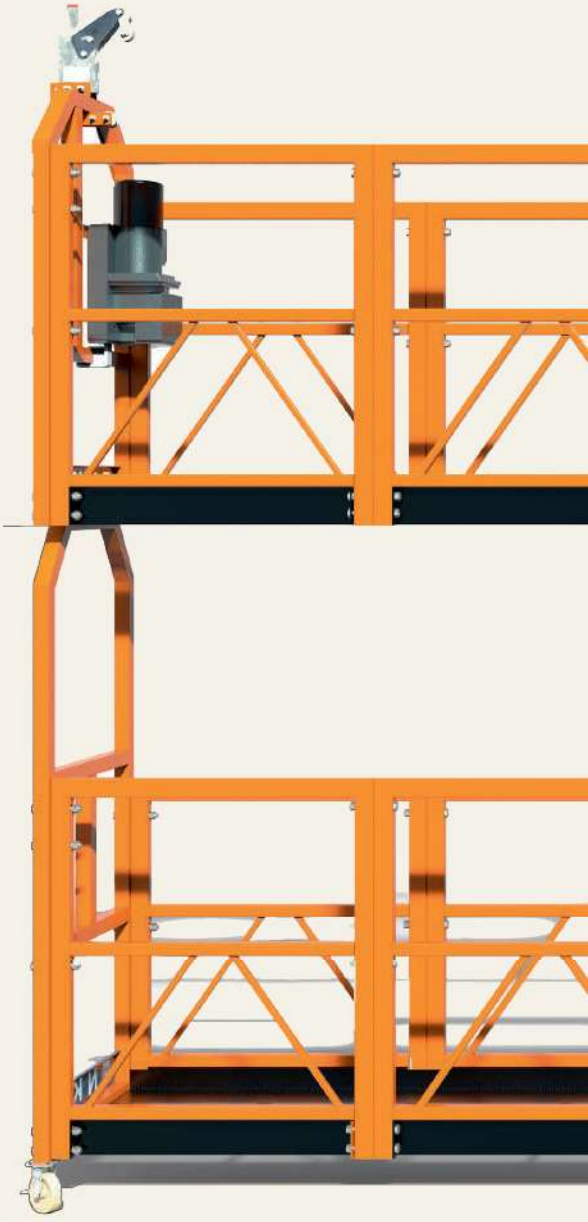



SUSPENSION MECHANISM



The suspended mechanism is the heavy-duty steel frame structure erected at top of working profile as the supporting equipment, bearing the rated and the load of the platform.







Each suspended access equipment take two sets of suspension mechanism. The force applied by the suspension mechanism on the building or supporting structure shall meet relevant loading requirements of building structure.

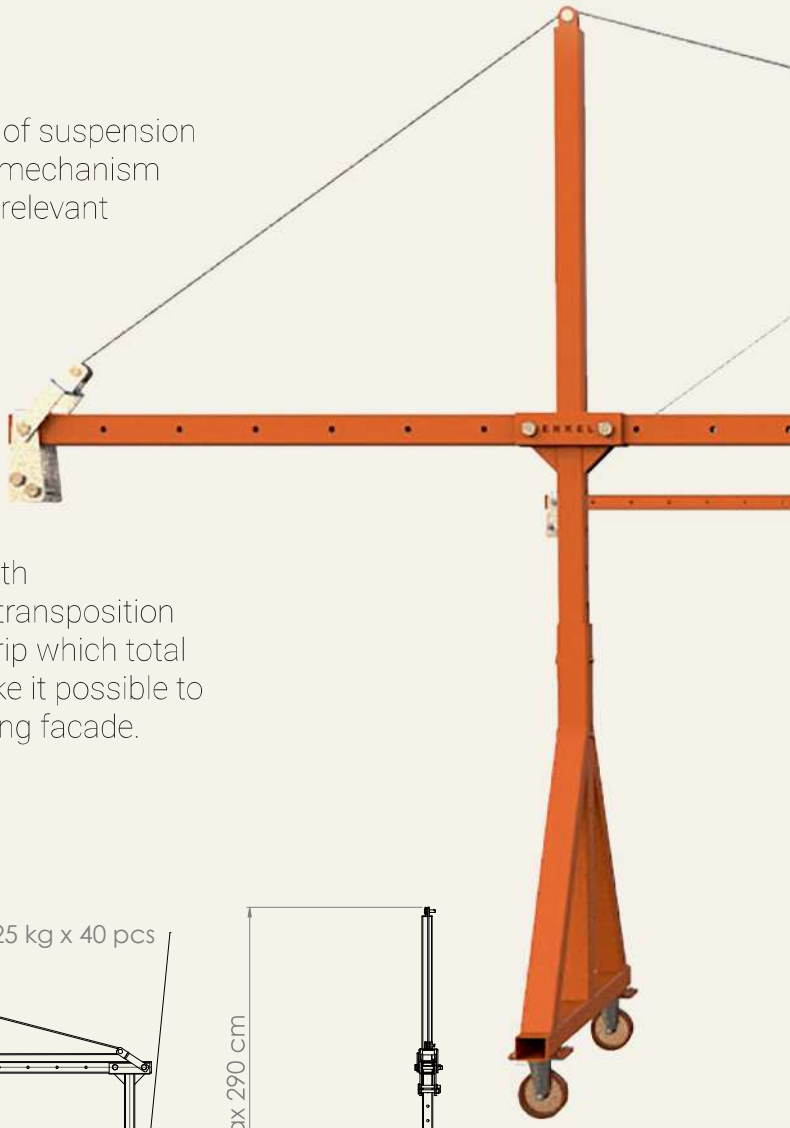

Counter-loads mounted on the roof and loaded with counterweight blocks weighing 25 kg, for ease of transposition they are equipped with handles with convenient grip which total weight is 1000 kg, a profile of 1.9 meters long make it possible to adjust the distance from the platform to the building facade.

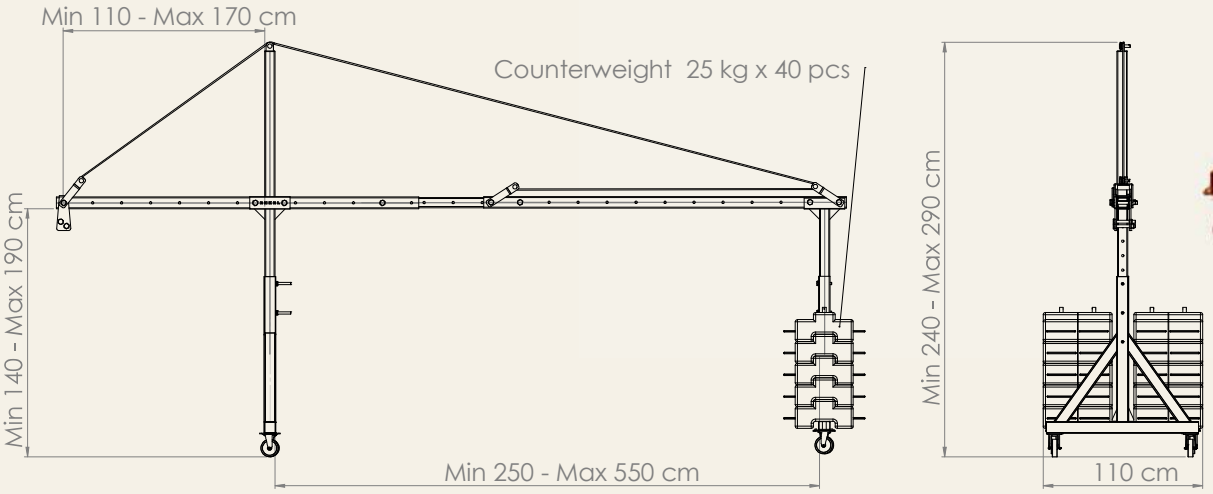



PARAPET CLAMP

Parapet clamps, also called parapet consoles are used to suspend a scaffold, a cradle or individual seat from the parapet of a building.

Parapet clamps can also be used to attach an equipment lifting hoist. Using parapet clamps is recommended for new construction sites.

The strength of the parapet should be verified with the architect. Parapet clamps are attachment elements that are very easy to install because they are small and do not weigh too much.



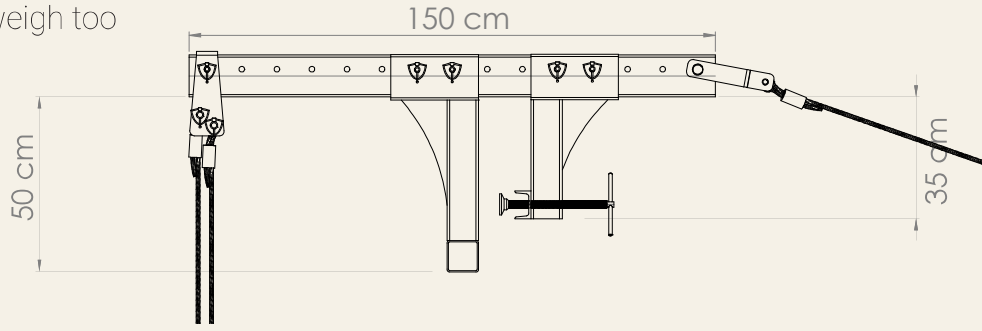



CONTROL BOX

Our control box waterproof with IP62 and has SMARTBY® Features, all the processors are in a controlled and microchip inside, provides make a soft start and use electronic overload sensors which prevent damage system and have very small size.



SAFETY LOCK

Safety lock is a separate mechanical unit that can automatically lock safety wire rope when the working wire rope is broken or the suspended platform tilts to its limits.



HOIST

Enkel electric suspended platforms use 2 pcs of1.5 kW 380 volt 3-phase powerful electric motors with aluminum gear box, easily climbing with 16 cm/sec (9,5 mt/min.). speed and lift 630 kg.



LIFTING TOWER

The electric lifting tower is designed for vertical lifting of loads up to a height of 12 meters. It is equipped with a powerful electric drive, ensuring smooth and safe operation. The structure is engineered to handle a maximum load capacity of 500 kg, making it ideal for use on construction sites, in warehouse complexes, and in manufacturing facilities.

Key features include:

- Lifting height: up to 12 meters.
- Load capacity: up to 500 kg.
- Drive system: electric, with precise control.
- Compact and stable design ensuring safe operation.
- Mobility: can be equipped with a wheelbase for easy transportation.
- This lifting tower is perfect for use in confined spaces, simplifies the handling of heavy loads, and minimizes physical strain on operators.

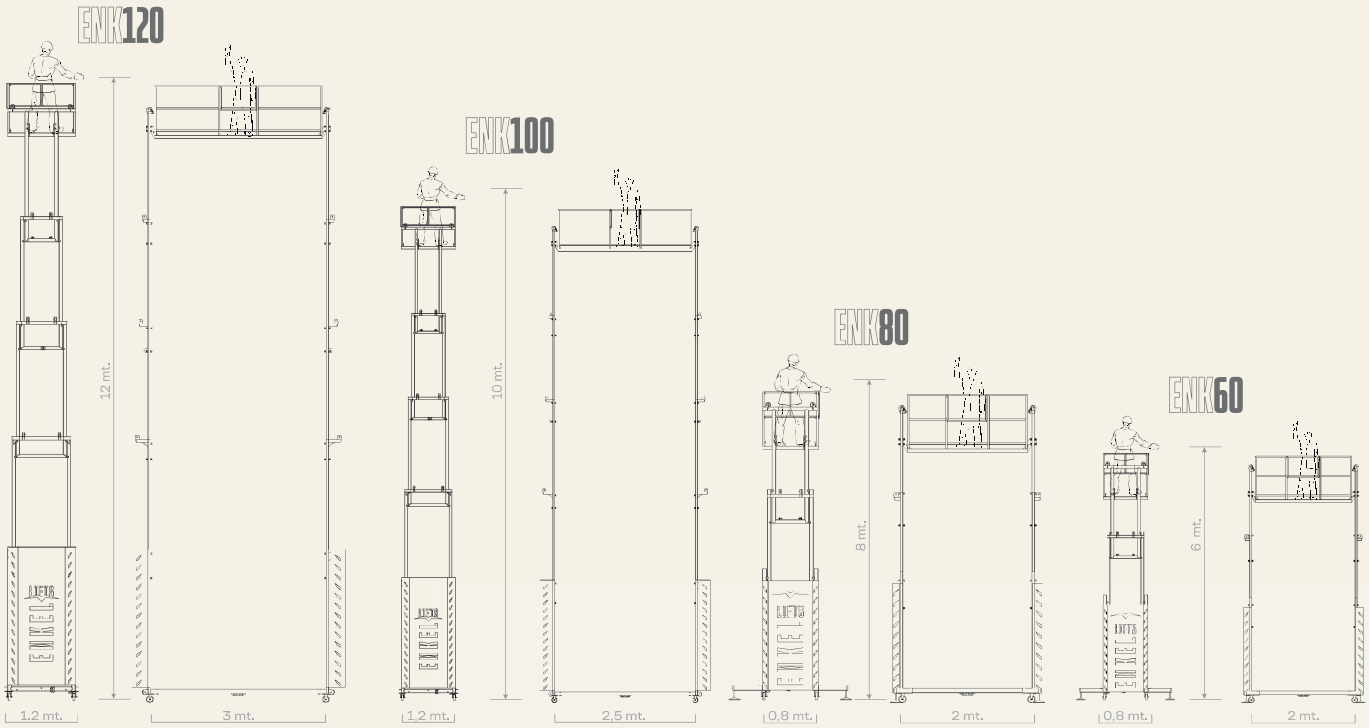

AREAS OF USE

Warehouses



Constractions



Freight Elevators



House Repairs







PALLET LIFTER

A pallet lifter is a versatile piece of equipment designed for the efficient lifting, transportation, and positioning of palletized goods. It is an essential tool in warehouses, manufacturing facilities, and retail environments, streamlining material handling tasks and improving productivity.

Key Features:
Load Capacity: Typically ranges from 500 to 750 kg, depending on the model.
Lifting Height: Can vary from a few centimeters to over 1,5 meters for high-lift models.
Mobility: Equipped with durable wheels or rollers, allowing smooth movement across various floor surfaces.
Operation: Available in semi-electric to suit different needs.
Safety Mechanisms: Often includes features like overload protection, braking systems, and ergonomic handles for operator safety and comfort.

NEW DESIGN

MAX FORK HEIGHT	1400MM
CAPACITY	500KG
BATTERY AC	110/220/230V
WEIGHT	130KG
FORK LENGHT	950MM











ENKEL OFFICE AND MANUFACTURING FACILITIES

ENKEL
MAKİNA

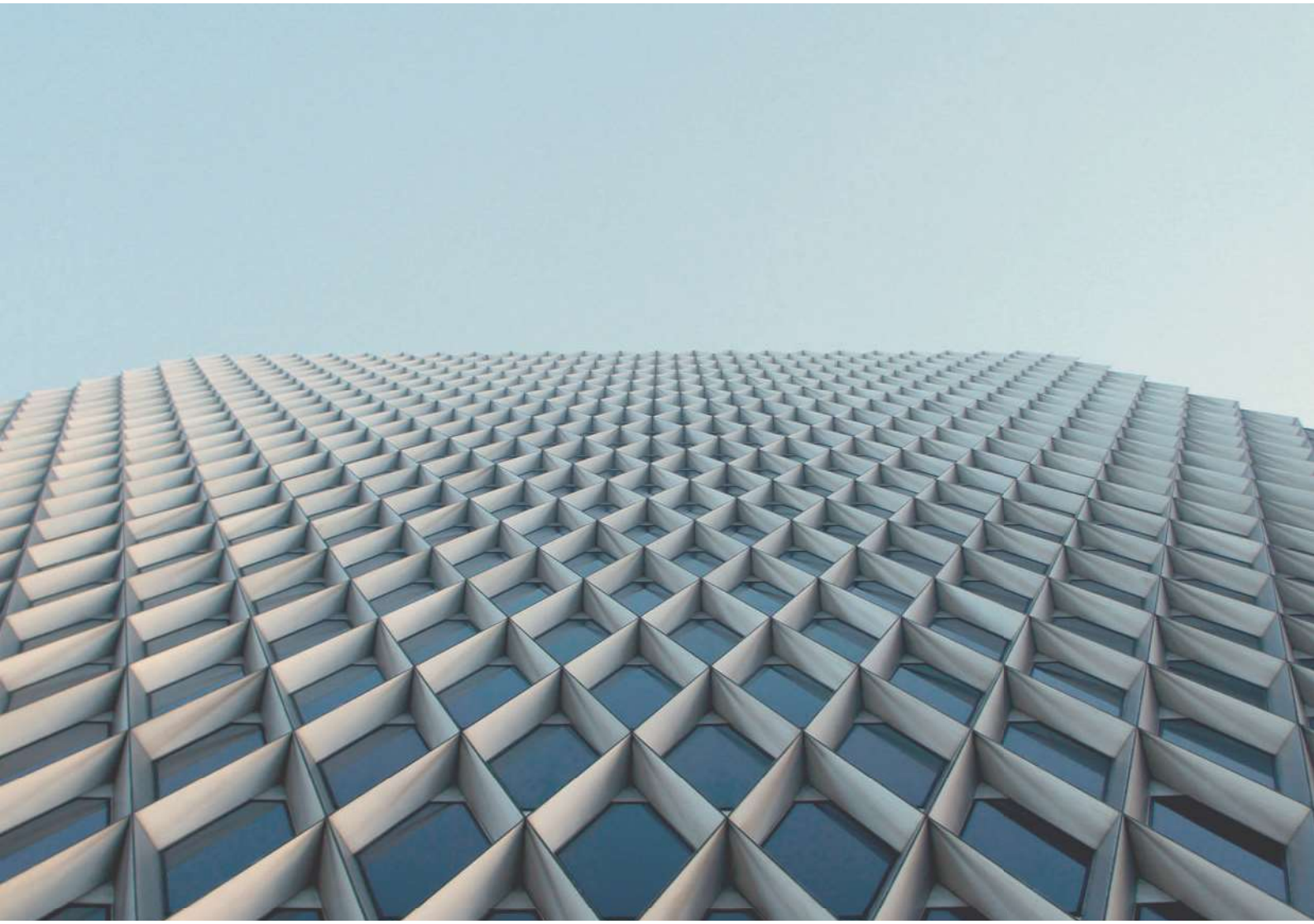

Head office
Yenimahalle Mahallesi, 1-1, Ödemiş Sk., 34500 Büyükçekmece/İstanbul

Factory
Yenimahalle Mahallesi, 1-2, Ödemiş Sk., 34500 Büyükçekmece/İstanbul

Tel: +90 212 863 0550
Web: www.enkel.com.tr